2510AIO Supplemental Insert

AIO Overview:

The AIO valve is designed for use when water containing contaminates subjected to oxidation is encountered. The water passes through the AIO valve then passes through the tank containing oxygen enriched filter media. The oxygen reduces all contaminates in the water to an oxide, or in the case of hydrogen sulfide gas, it is reduced to a molecule of acid.

Regeneration as follows:

Backwash (BW): Cycle Step #1	The backwash cycle washes oxidized contaminates to drain and reclassifies the media bed.
Air Draw (BD): Cycle Step #2	Air Draw empties water from tank and replenishes oxygen to filter media.
Rapid Rinse (RR): Cycle Step #3	Rapid Rinse purges excess atmosphere from the media tank and distributor.

NOTE: Due to the oxygen in the media tank, maximum 80 PSI for operation.

SXT Programming:

Programming Abbreviation	Programming Definition	* Option Abbreviation	Option Definition
DF	Display Format	GAL	Gallons – 12 hour time
VT	Valve Type	DF1b	Downflow Single Backwash
CT	Control Type	tc	Time Clock – Regenerates based on days
NT	Number of Tanks	1	Single Tank
DO	Day Override	3	Days Between Regeneration – In conditions of high water usage and/or high levels of contaminants, the AIO may need to regenerate more frequently than once every three days. DO NOT set the regeneration day override for a longer period than three days, as the filter media can become fouled with contaminates, rendering the AIO ineffective.
RT	Regeneration Time	12:30 AM	Regeneration Time – If there is a need to change the factory default, then make sure the time of regeneration is not the same with any other water treatment equipment in the system.
BW	Backwash	14	See AIO Overview Above
BD	Air Draw	40	See AIO Overview Above
RR	Rapid Rinse	1	See AIO Overview Above
BF	Brine Fill	Off	Not Applicable

* Factory Defaults

Reference the SXT service manual for information on the following:

- **Changing time of day**
- **Viewing diagnostics**
- **Trouble shooting**
- **Parts list**

Installation Overview:

Install the AIO valve after the supply lines to the outside faucets (unless outside faucets need to be free of contaminates in water). The AIO valve is generally installed before a water softener or any taste/odor cartridges, if applicable.

Insure the inlet check valve is connected as shown to the inlet side of the AIO valve. The drain should be installed in accordance with plumbing codes. Due to the release of air during regeneration, the drain line should be anchored through out the run and secured at the end of the drain line. The drain line should be sized for the backwash rate and friction loss.

The **drain line flow control** should accommodate the size tank and backwash rate for the filter media being used.

The **injector size** (slow rinse rate based on pressure) should be size the same as the service flow rate of the filter media being used.

AIO Specific Parts:

Item#	Part #	Description
1	*61662	PISTON ASSY, 2510AIO
2.	*12777-02	CAM, AIR DRAW
3.	*41861	CHECK VALVE, AIR DRAW
4.	XXXXX	SCREEN, AIO
5.	XXXXX	CHECK VALVE, INLET
6.	XXXXX	SCREW
7.	1030043	DEFLECTOR, AIO

* Part not shown but illustration showing location

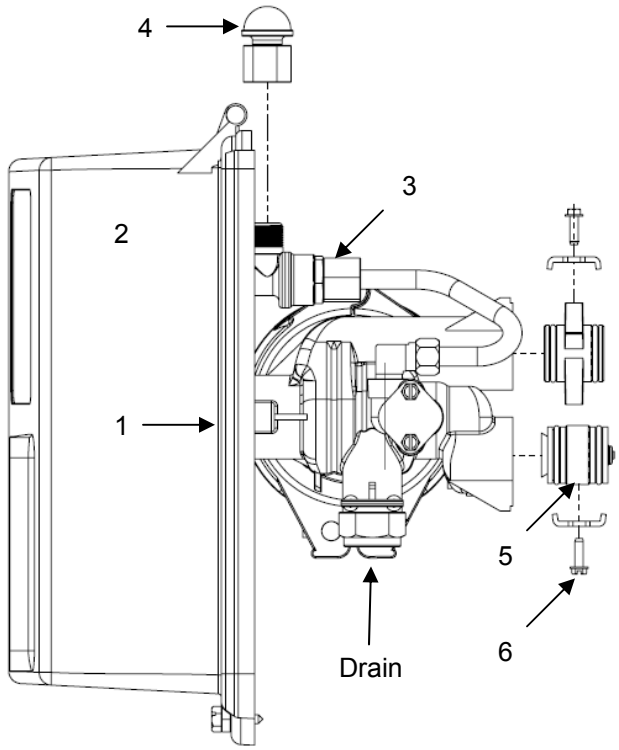

Defector Installation:

Put a thin layer of silicone lube around inside diameter of the defector. Slowly slide the defector over the distributor tube down about 1". When threading the AIO valve to the tank, the bottom of the threads will slide the deflector down. As shown in diagram.

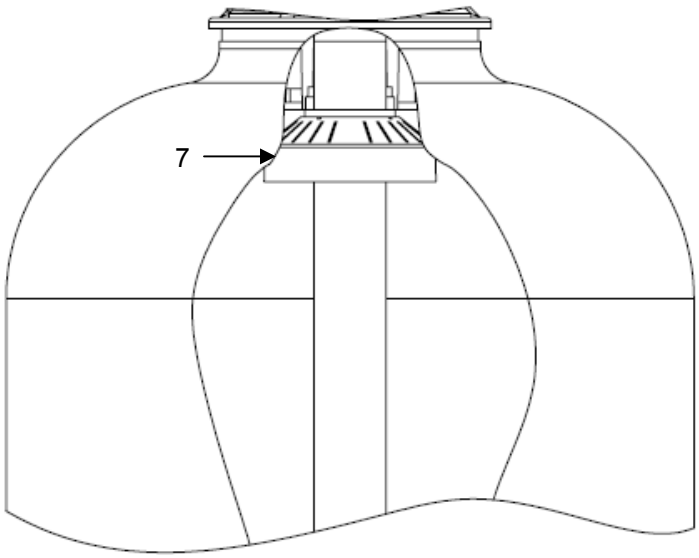

Reference the 2510 service manual for information on the following:

- **Trouble shooting**
- **Parts list**